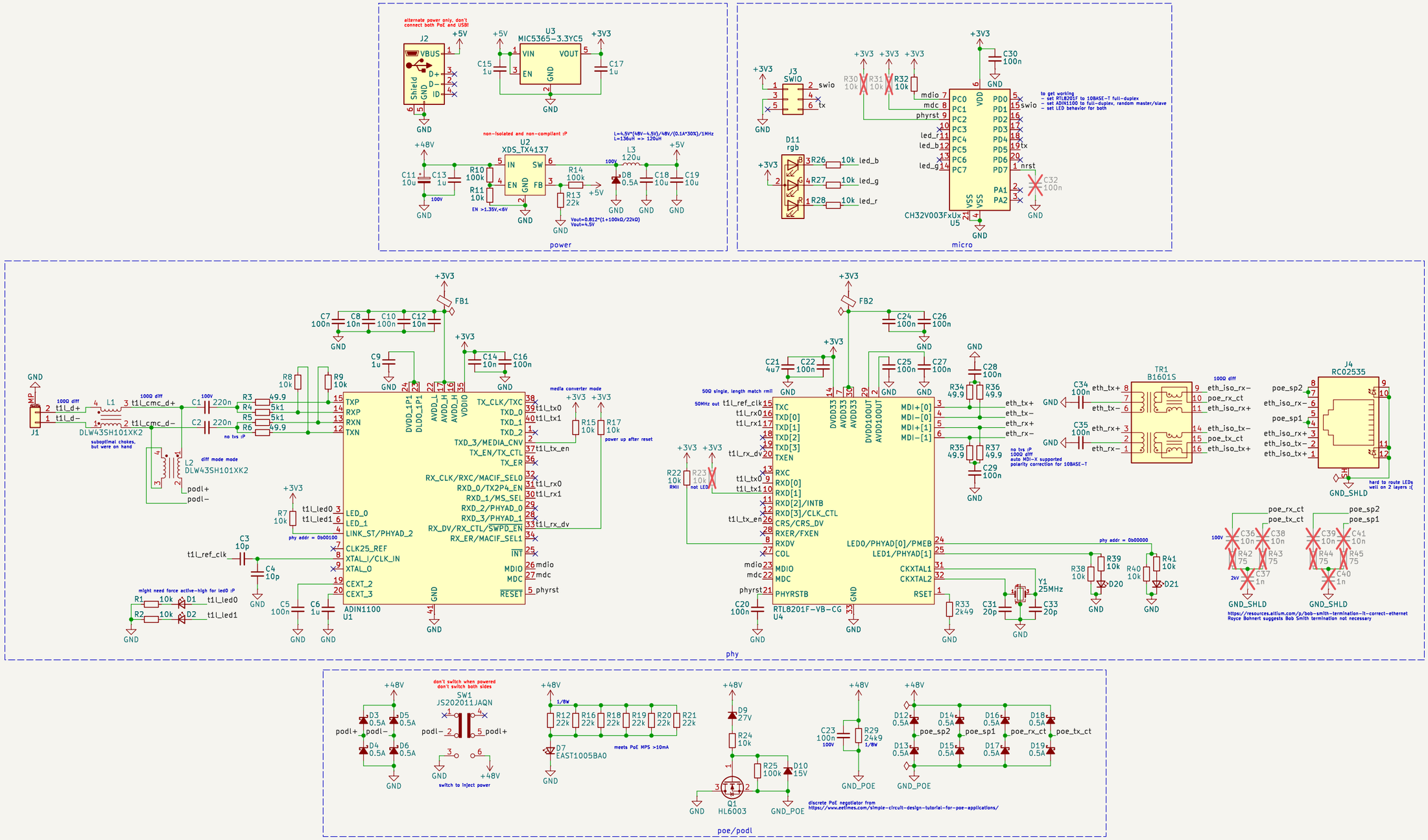

Sheet: /
File: adin1100_podl.kicad_sch

Title:

Size: A3	Date:	Rev:
KiCad E.D.A. 8.0.4		Id: 1/1