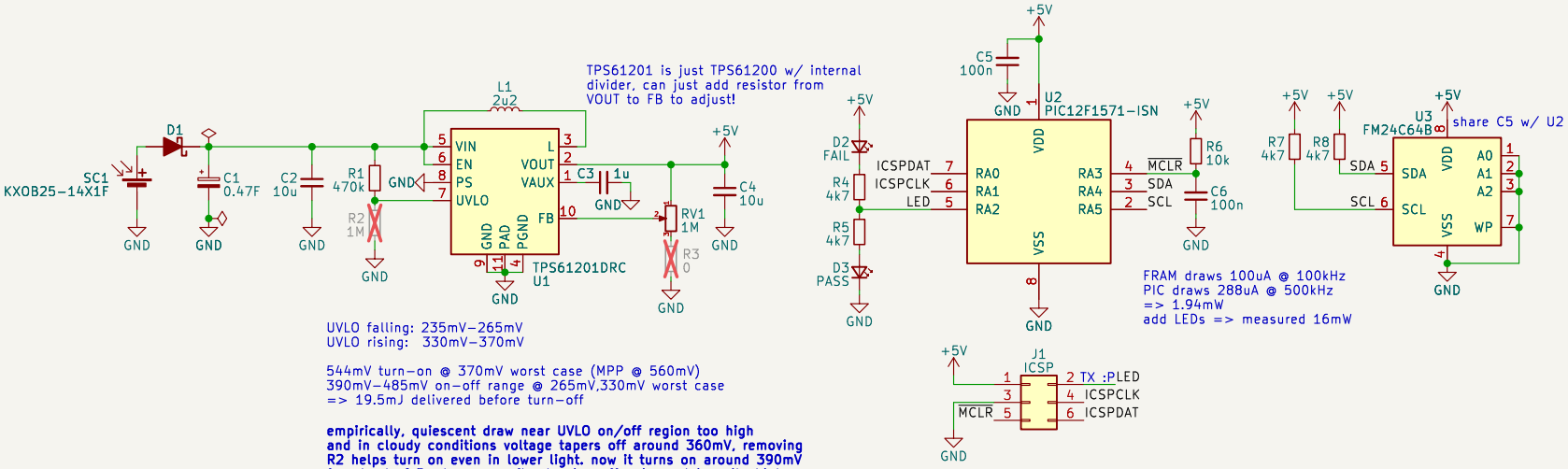

UVLO falling: 235mV–265mV
UVLO rising: 330mV–370mV

544mV turn-on @ 370mV worst case (MPP @ 560mV)
390mV–485mV on-off range @ 265mV,330mV worst case
=> 19.5mJ delivered before turn-off

empirically, quiescent draw near UVLO on/off region too high and in cloudy conditions voltage tapers off around 360mV, removing R2 helps turn on even in lower light. now it turns on around 390mV for about ~0.5s. however, after turning off quiescent is quite high and charging doesn't resume until dropping to 200mV when presumably the TPS61201 turns fully off.

Sheet: /		
File: solarFRAM.kicad_sch		
Title:		
Size: A4	Date:	**Rev:**
KiCad E.D.A. 8.0.4		Id: 1/1